DocuSign Envelope ID: 5AC6621D-C6F1-4A1E-A3E5-0FBBB9DA8D42

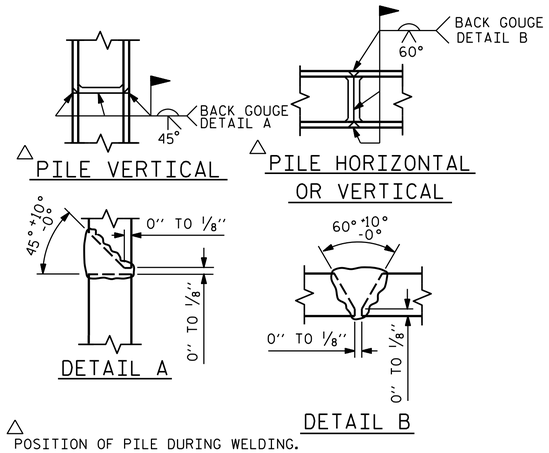

PILE SPLICE DETAILS

BAR TYPES

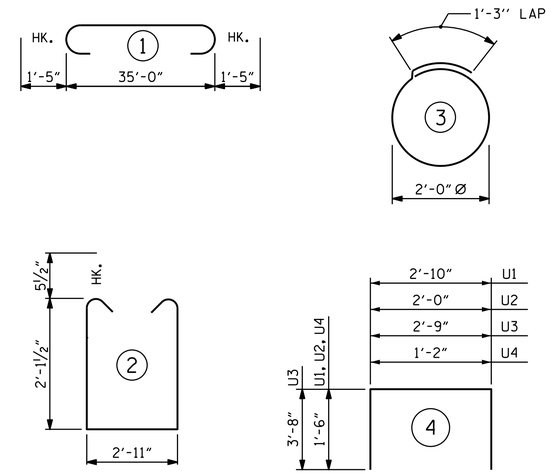

ALL BAR DIMENSIONS ARE OUT TO OUT.

BILL OF MATERIAL
FOR BENT No. 3

BAR	NO.	SIZE	TYPE	LENGTH	WEIGHT
B1	4	#10	1	37'-10"	651
B2	4	#10	STR	35'-2"	605
B3	4	#5	STR	35'-2"	147
B4	12	#4	STR	18'-10"	151
B5	9	#4	STR	2'-11"	18
D1	44	#6	STR	1'-6"	99
S1	39	#5	2	8'-1"	329
S2	16	#4	3	7'-7"	81
U1	4	#4	4	5'-10"	16
U2	6	#4	4	5'-0"	20
U3	2	#9	4	10'-1"	69
U4	35	#4	4	4'-2"	98

REINFORCING STEEL (FOR BENT No. 3) 2284 LBS

CLASS A CONCRETE BREAKDOWN (FOR BENT No. 3)

TOTAL CLASS A CONCRETE 11.7 C.Y.

HP 14 X 73 GALVANIZED STEEL PILES (FOR BENT No. 3)

No. 8 LIN. FT. 480

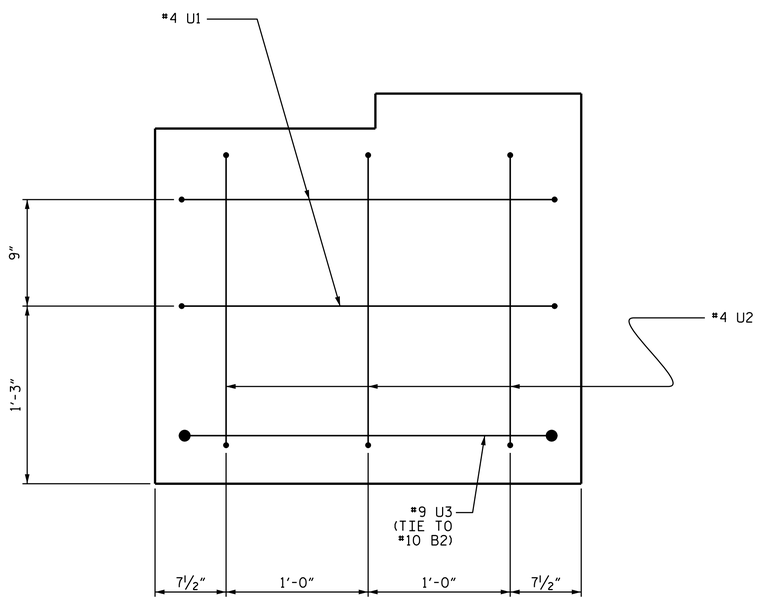

END OF CAP VIEW
(SIMILAR BOTH ENDS)

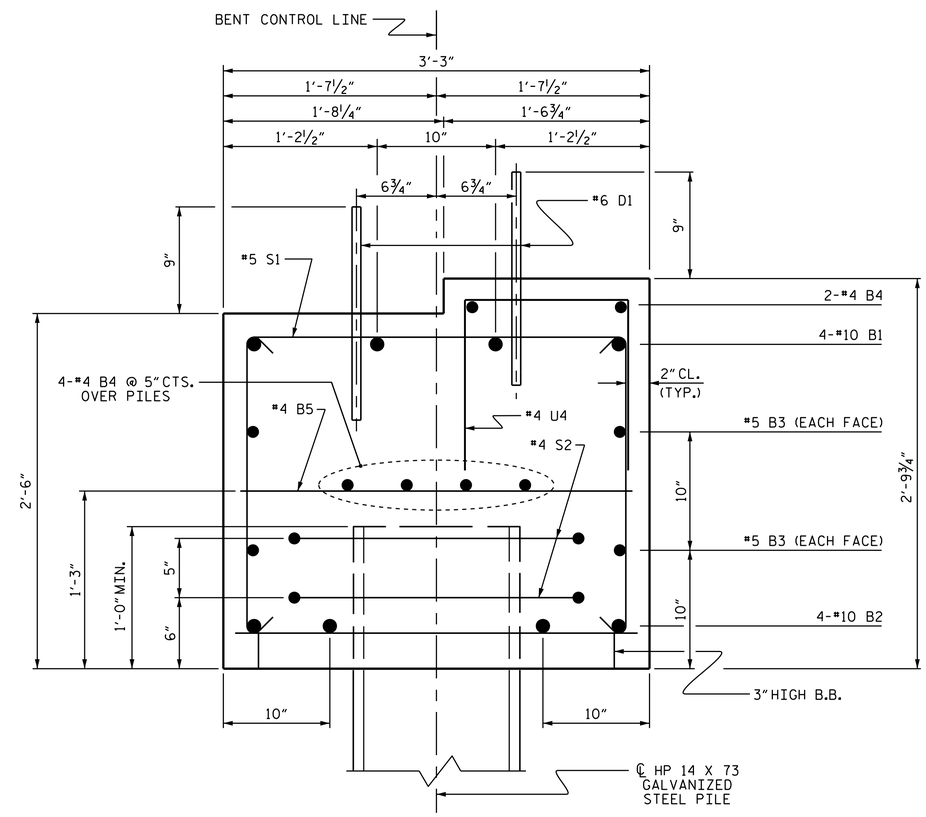

SECTION A-A

PROJECT NO. B-4950
CUMBERLAND/SAMPSON COUNTY
STATION: 18+27.50 -L-

SHEET 2 OF 2

STATE OF NORTH CAROLINA
DEPARTMENT OF TRANSPORTATION
RALEIGH

SUBSTRUCTURE

BENT No. 3

DocuSigned by: 1/16/2017

NORTH CAROLINA PROFESSIONAL SEAL 037031 ENGINEER LISA M. SAMPLES

ms consultants, inc.
920 Main Campus Drive
Suite 430
Raleigh, NC 27606
NC License Number : C-3239

ASSEMBLED BY : J.M. KEPICH DATE : 11/16
CHECKED BY : L.M. SAMPLES DATE : 11/16
DRAWN BY : DGE 05/10
CHECKED BY : MKT 05/10
REV. 11/14 MAA/TMG

DOCUMENT NOT CONSIDERED FINAL UNLESS ALL SIGNATURES COMPLETED

REVISIONS							SHEET NO.
NO.	BY:	DATE:	NO.	BY:	DATE:		S2-25
1			3				TOTAL SHEETS
2			4				27

STR. 2

STD. NO. 14" HP_BT_33_90S_<60'